RL 110 AX
Active Directional Speaker with Integrated Motion Sensor

rlseries

Description

The RL 110 AX directional speaker features an integrated motion sensor and supercardioid pattern for the targeted acoustic irradiation of confined listening areas. The RL 110 AX switches itself on automatically as soon as anyone approaches it from the front. At the same time, an isolated contact closes and can then be used to control an external media player. A follow-up time of 1 – 1024 seconds can be set for the audio signal. If required, the RL 110 AX can also be switched to continuous operation.

The RL 110 AX has four operating modes:

- PLAY FILE ONCE: The entire audio file is played and can only be restarted once it is finished.
- EXTEND PLAY: Speaker activity is extended every time movement is detected.
- ONLY SPEAKER SWITCHED: Speaker operating time is controlled by the sensor; the isolated contact is permanently closed.
- CONTINUOUS: Permanent operation

The integrated amplifier has 20 watts power and an automatic switch ON (auto ON/OFF). A stereo-cinch input, volume control, Power LED and connections for external players are located on the rear. MP3 players and computers can be directly connected thanks to the high input sensitivity.

Key Features

- Active directional speaker
- 30° motion sensor integrated
- Switch for external Player
- Supercardioid pattern
- 3“ full-range driver
- 80° dispersion angle
- Stereo-cinch input
- 20 watts power
- Switchable high-pass filters
- Auto ON/OFF
- Standard finish: white and black

Fields of Applications

- Exhibitions, trade fairs
- Museums
- Shops, sales rooms

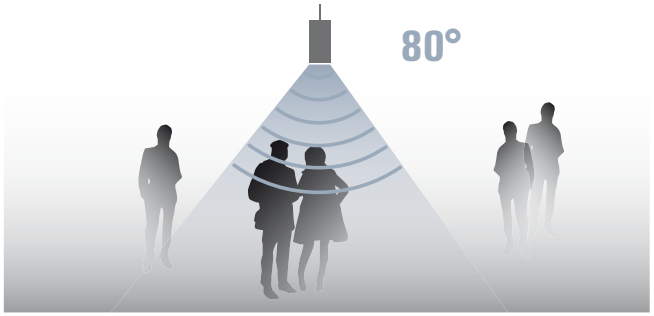

Minimum lateral sound radiation and a short distance allows focused acoustic irradiation to the visitors.

RL 110 AX
Active Directional Speaker with Integrated Motion Sensor

Dimensions

RL 110 AX

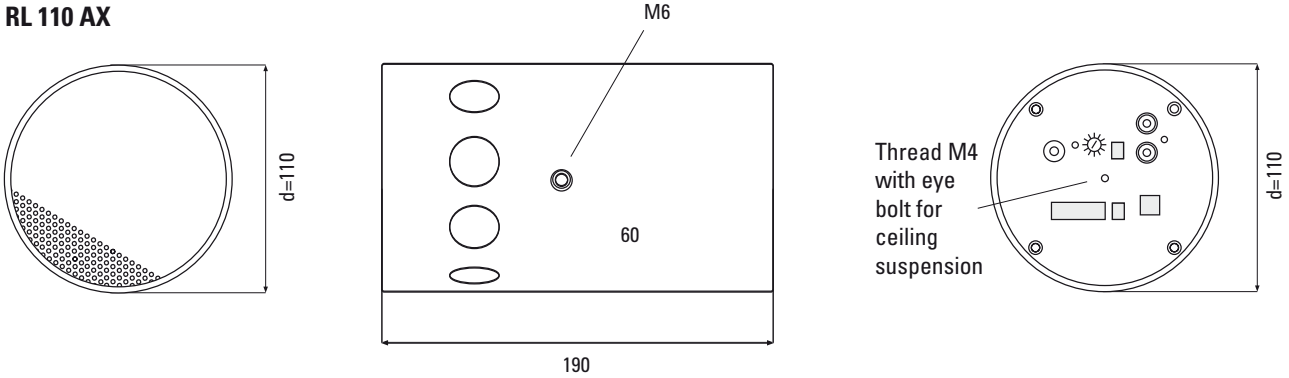

Technical Data

Principle	Active directional speaker with integrated motion sensor and supercardioid pattern
Components	3"-full-range driver
Frequency range	190 Hz – 19 kHz
Amplifier output	20 watts
Sensitivity	max. 95 dB (1W@1m)
Dispersion angle	80°
Connectors	Input cinch-stereo, switch for external player
Input sensitivity	-6 dBU for full modulation, input sensitivity 10 kohms
Operation Controls	Volume control, switch auto ON/steady ON, switchable high-pass filter, LED power ON, DIP-switch for operating modes: PLAY FILE ONCE, EXTEND PLAY, ONLY SPEAKER SWITCHED, CONTINUOUS; DIP-switch to adjust delay (1 – 1024 sec.)
Power supply	15 V DC (included in delivery)
Mains	90 – 240 V AC
Dimensions	d = 110 mm, l = 190 mm
Weight	1.4 kg
Cabinet	Aluminium, front precision steel grille, powder-coated
Fastening points	Suspension point at rear M 4 with eye bolt, threaded insert M 6 laterally for optional wall mount WH 110
Warranty	5 years

Model	Order-No.	Version
RL 110 AX White	0901-0009	RAL 9016
RL 110 AX Black	0901-0010	RAL 9005

Other versions and colours on request

Accessories	Order-No.	Version
WH 110 White	7109-0001	L-braket with assembly plate, incl. savety rope
WH 110 Black	7109-0002	L-braket with assembly plate, incl. savety rope
SR 300	7109-0003	Stainless steel rope for pendant mounting, lenght 3 m, thickness 1 mm, one side with loop

Dimensions Wall Mount

WH 110 L-Bracket

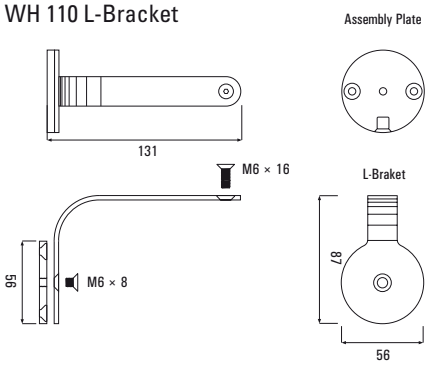

RL 110 AX
Active Directional Speaker with Integrated Motion Sensor

Operational Controls

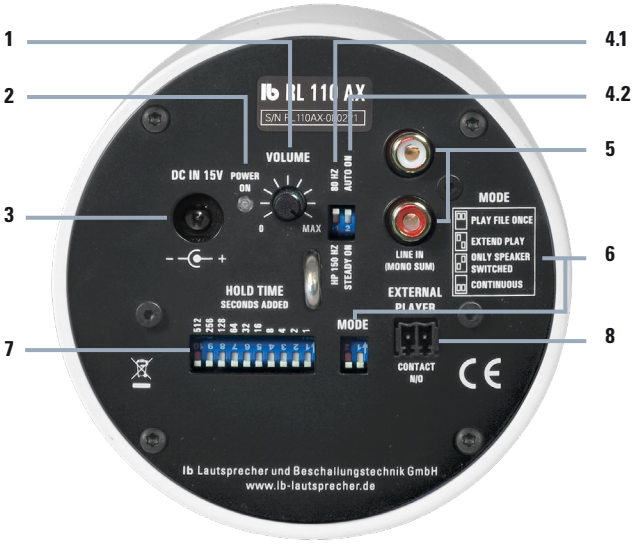

1 VOLUME
2 POWER ON
3 DC IN 15 V
4 DIP-switch for high-pass filters and auto on
4.1 Switch for high-pass filters (80 Hz or 150 Hz).
4.2 AUTO ON / STEADY ON
5 LINE IN (MONO SUM)
6 MODE – selection of four operating modes
PLAY FILE ONCE
EXTEND PLAY
ONLY SPEAKER SWITCHED
CONTINUOUS
7 HOLD TIME (SECONDS)
8 EXTERNAL PLAYER

See further technical informations in the datasheets and on our website: https://www.lb-lautsprecher.de/en/Directional-Speakers

Measuring Diagramms

RL 110 AX Sens. 2,83V/1m: 79,5 db (100-10k) 197 Hz - 19,5 kHz (-6 dB)

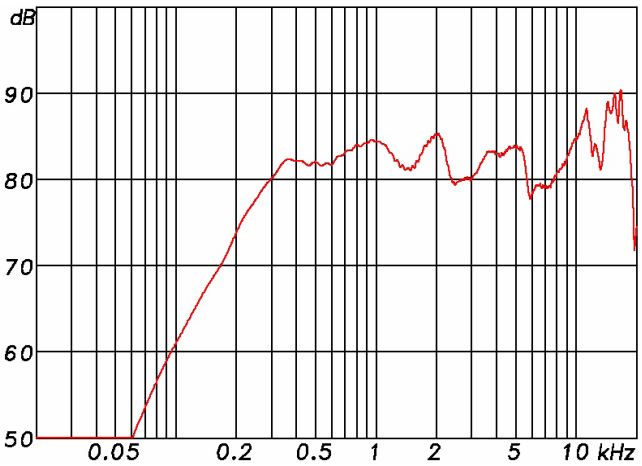

RL 110 AX max. SPL @ 3% and 10% distortion threshold 30 W max. Power

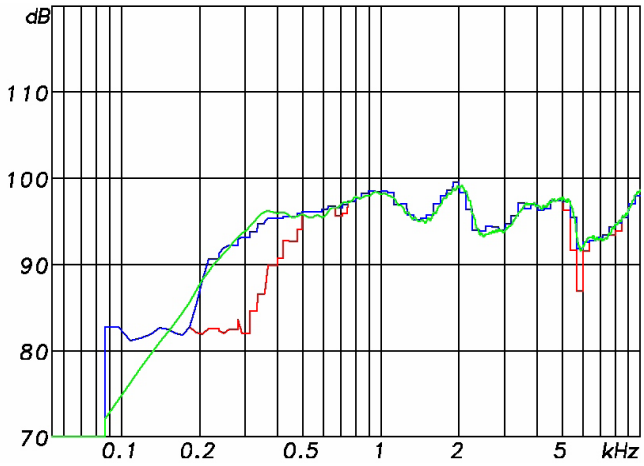

RL 110 AX Directivity Plot

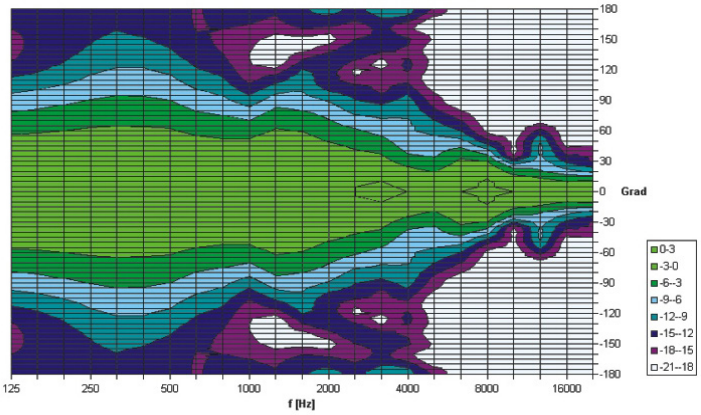

Changes and errors excepted. 2/2023